2/2-way solenoid valve, article 252-MS -direct operated-
diameter G 1/4”

Force pilot operated solenoid valves start from 0 bar and do not require a pressure differential between the upstream and downstream pressure. During energizing the magnetic coil lifts the sealing element from the valve seat and opens the flow hole. The valve closes by spring force. By default these solenoid valves are designed with the **-normally closed-** function. With the design of the **-normally open-** type usually reduces the maximum closing pressure.
The flow direction is indicated by an arrow on the housing, the position of the solenoid valve coil should preferably be upright.

Connections
Both sides with female thread acc. to DIN ISO 228 (BSP)

Viscosity </= 20 cSt (Centistocks)

Solenoid valves should only be used with clean, liquid or gaseous media.
For low contamination we recommend the use of an upstream strainer.

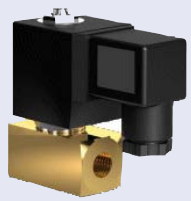
normally closed


normally open

T °C	ambient	to max. +50°C
	diaphragm	medium temperature
	NBR:	-10°C ... +80°C
	EPDM:	-10°C ... +130°C
	FKM:	-10°C ... +120°C

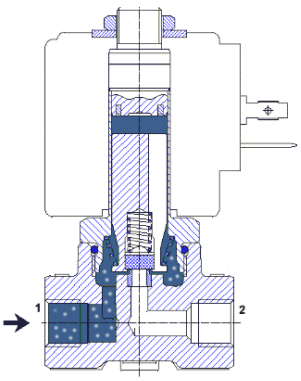

valve closed
magnet coil currentless

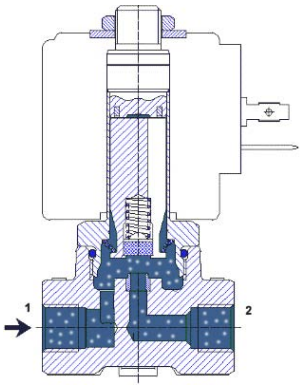

valve opened
magnet coil energized

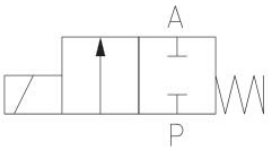

Schaltfunktion/Function:
in Ruhestellung gesperrt - NC.
normally closed - NC.

- design	: poppet valve
- electrical part	: plug socket acc. to DIN EN 175301-803, Form A
- supply voltage	: 230V 50Hz AC voltage, 24V DC voltage
- voltage tolerance	: +/- 10% acc. to VDE 0580
- power consumption	: 230V 50Hz AC : 15 VA / 24V DC : 18 Watt
- duty-cycle	: 100% ED
- protection class	: IP65 with mounted plug socket
- mounting position	: optional
- pressure range	: see selection table

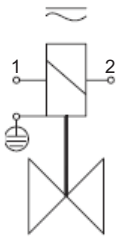

Connection diagram:
clamp: 1 (N) blue
clamp: 2 (L) black/brown
clamp: ⏚ (PE) green/yellow

252-MS_ENG_2021_Rev. 0

BSA-Armaturen GmbH
Einstein Ring 20
D-48599 Gronau
Tel.: +49 (0)2562/70107-0
Fax: +49 (0)2562/70107-11
E-mail : info@bsa-armaturen.de
Internet: www.bsa-armaturen.de

2/2-way solenoid valve, article 252-MS -direct operated- -normally closed-

diameter G 1/4”

Valve options:	
free of oil and grease	
special connection	NPT
Ex-proof area	II 2G Ex mII T4 II 3D IP65 T130°C
special magnets	size 13/36 (temperature-reducing) special voltage
plug socket with LED	

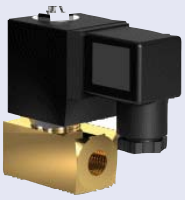

normally closed

description	material
body	brass
diaphragm	NBR (standard) optionally EPDM, FKM

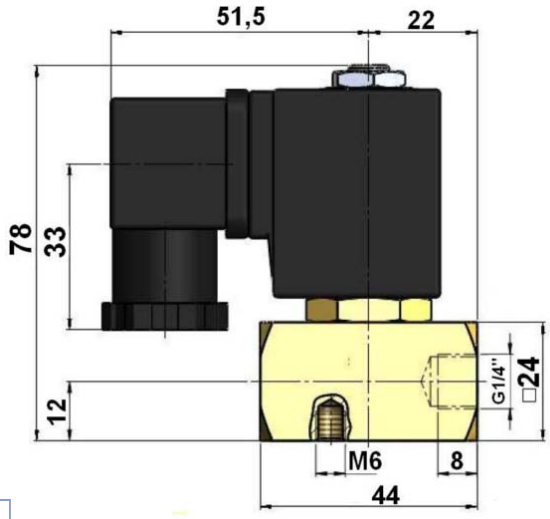

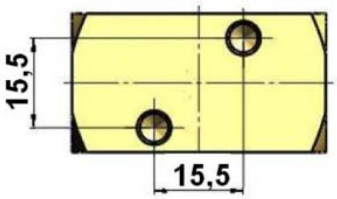

diameter	seat diameters Ø (mm)	max. pressure (bar) AC voltage 230V 50Hz AC	max. pressure (bar) DC voltage 24V DC	Kv-value [m³/h]
G 1/4”	2,0	0 - 48	0 - 38	2,3
G 1/4”	2,5	0 - 30	0 - 24	3,0
G 1/4”	3,0	0 - 20	0 - 16	3,7
G 1/4”	4,0	0 - 10	0 - 8	6,5
G 1/4”	6,0	0 - 6	0 - 4,8	9,5

Article numbers:

		normally closed	
diameter	seat diameter Ø (mm)	**AC voltage** power consumption 15 VA	**DC voltage** power consumption 18 Watt
G 1/4”	2,0	235.1110.0.61-2,0	235.1112.0.61-2,0
G 1/4”	2,5	235.1110.0.61-2,5	235.1112.0.61-2,5
G 1/4”	3,0	235.1110.0.61-3,0	235.1112.0.61-3,0
G 1/4”	4,0	235.1110.0.61-4,0	235.1112.0.61-4,0
G 1/4”	6,0	235.1110.0.61-6,0	235.1112.0.61-6,0

BSA-Armaturen GmbH
Einstein Ring 20
D-48599 Gronau

Tel.: +49 (0)2562/70107-0
Fax: +49 (0)2562/70107-11

E-mail : info@bsa-armaturen.de
Internet: www.bsa-armaturen.de

2/2-way solenoid valve, article 252-MS -direct operated- -normally open-

diameter G 1/4”

Valve options:	
free of oil and grease	
special connection	NPT
Ex-proof area	II 2G Ex mII T4 II 3D IP65 T130°C
special coils	with lead wire (fully encapsulated) special voltages
plug socket with LED	

description	material
body	brass
diaphragm	NBR (standard) optionally EPDM, FKM

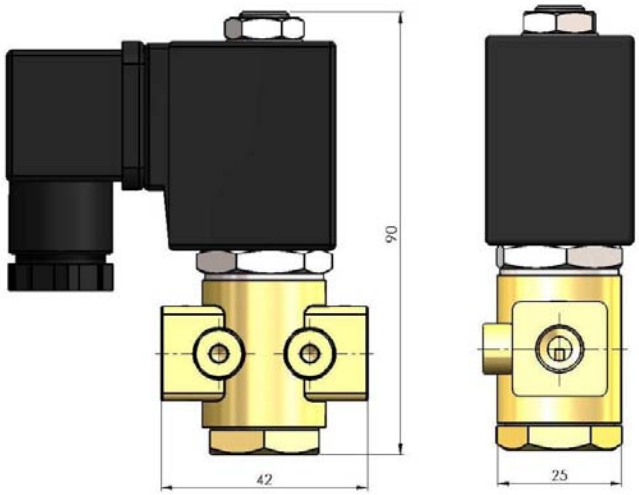

Diameter	seat diameter (mm)	max. pressure (bar)	Kv-value [m³/h]
G 1/4”	1,0	0 - 30	0,57
G 1/4”	1,5	0 - 20	1,29
G 1/4”	2,5	0 - 15	2,87
G 1/4”	3,0	0 - 12	3,58
G 1/4”	4,0	0 - 5	5,73

Article numbers:

		normally open	
Diameter	seat diameter (mm)	**AC voltage** power consumption 15 VA	**DC voltage** power consumption 18 Watt
G 1/4”	1,0	235.1111.0.61-1,0	235.1113.0.61-1,0
G 1/4”	1,5	235.1111.0.61-1,5	235.1113.0.61-1,5
G 1/4”	2,5	235.1111.0.61-2,5	235.1113.0.61-2,5
G 1/4”	3,0	235.1111.0.61-3,0	235.1113.0.61-3,0
G 1/4”	4,0	235.1111.0.61-4,0	235.1113.0.61-4,0

BSA-Armaturen GmbH
Einstein Ring 20
D-48599 Gronau

Tel.: +49 (0)2562/70107-0
Fax: +49 (0)2562/70107-11

E-mail : info@bsa-armaturen.de
Internet: www.bsa-armaturen.de